CAN YOU SEE THE AIRPLANES? THE ADJACENT SAMPLES SHOW THREE DIFFERENT LEVELS OF SHADING. SETTINGS FOR VIEWING AND PRINTING DRAWING CONTENT ARE OPTIMIZED WHEN ALL THREE PLANES ARE VISIBLE. THIS GUIDANCE IS PROVIDED FOR REFERENCE ONLY.

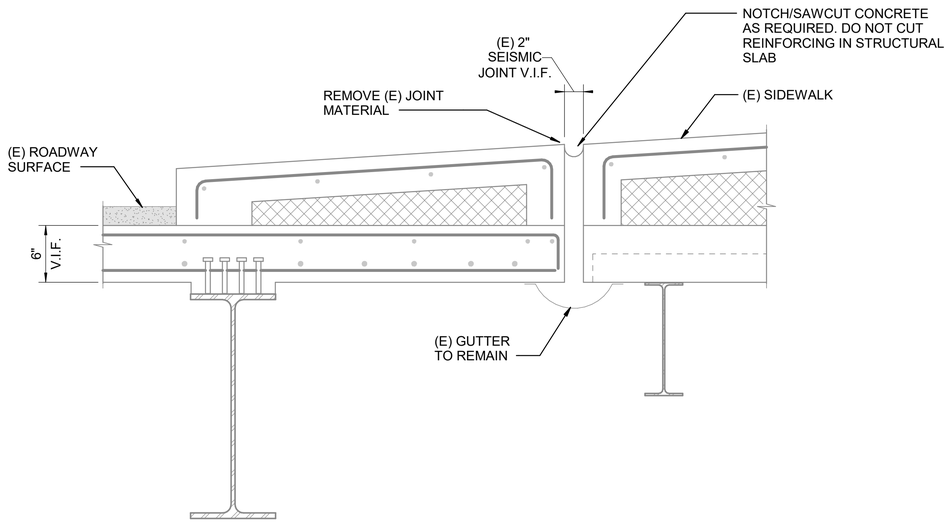


EXISTING CONDITION AND DEMO

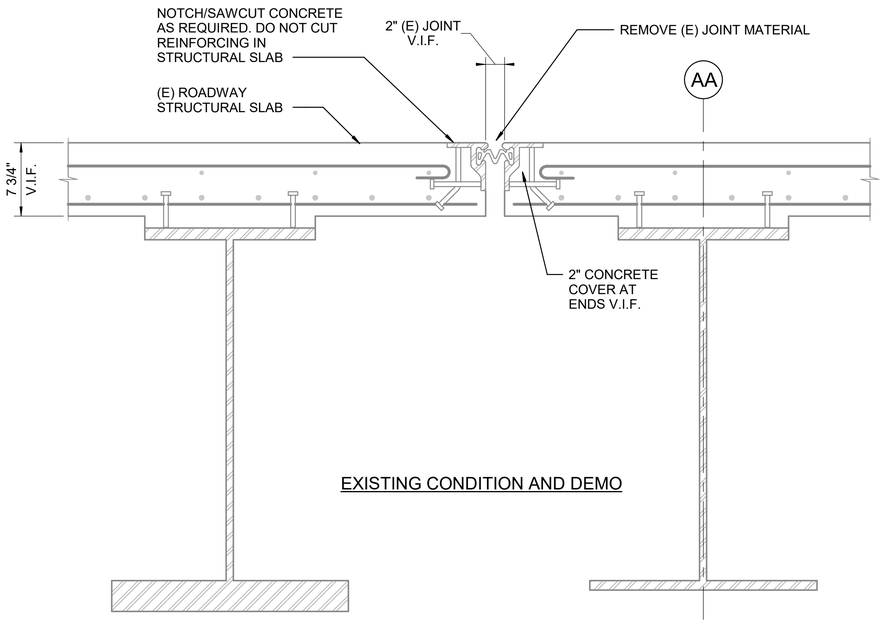


EXISTING CONDITION AND DEMO

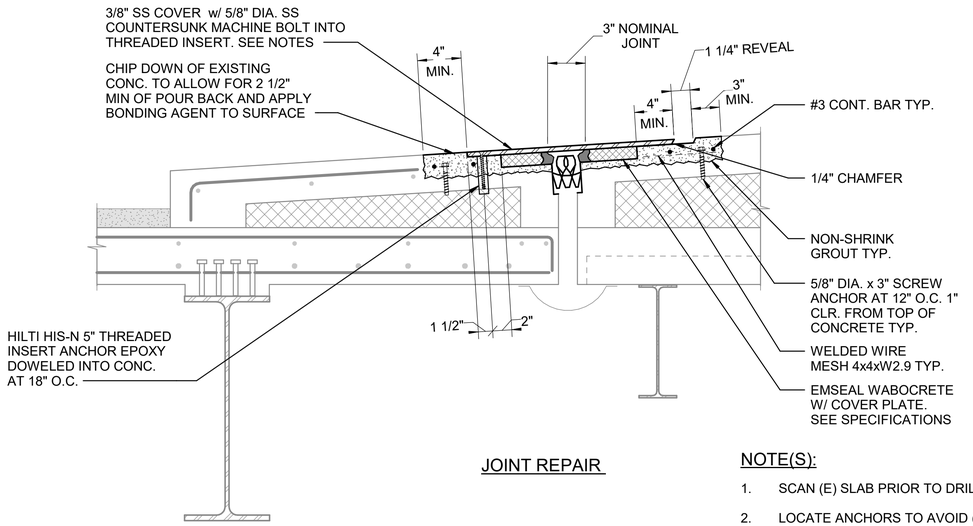


JOINT REPAIR

NOTE(S):

1. SCAN (E) SLAB PRIOR TO DRILLING AND CUTTING
2. LOCATE ANCHORS TO AVOID (E) REINFORCING.
3. DO NOT CUT OR DAMAGE BAR IN (E) STRUCTURAL SLAB.
4. COVER PLATE TO BE FABRICATED IN LENGTHS OF 4'-0" MIN., 6'-0" MAX. PLATES SHOULD BE EQUAL LENGTH.

1 SEISMIC JOINT AT SOUTH EXIT RAMP AT SIDEWALK (JOINT 26)
SCALE: N.T.S.

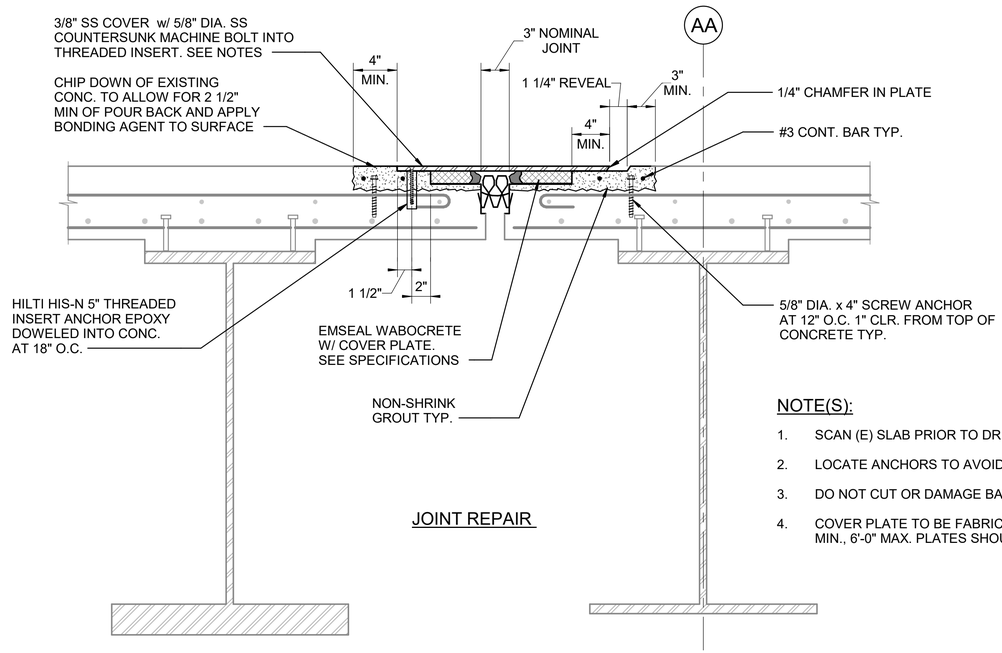


JOINT REPAIR

NOTE(S):

1. SCAN (E) SLAB PRIOR TO DRILLING AND CUTTING
2. LOCATE ANCHORS TO AVOID (E) REINFORCING.
3. DO NOT CUT OR DAMAGE BAR IN (E) STRUCTURAL SLAB.
4. COVER PLATE TO BE FABRICATED IN LENGTHS OF 4'-0" MIN., 6'-0" MAX. PLATES SHOULD BE EQUAL LENGTH.

2 SEISMIC JOINT - INSIDE ROADWAY - SOUTH TRANSVERSE JOINT (JOINT 29)
SCALE: N.T.S.

| NO. | DATE | BY | REVISIONS | APP |
|---|---|---|---|---|
| | | | | |

| NO. | DATE | BY | REVISIONS | APP |
|---|---|---|---|---|
| | | | | |

Port of Portland


mwa architects
501 SE 14TH AVE., SUITE 103
PORTLAND, OR 97214
P 503.973.5151 - F 503.973.5060

kpff
111 SW Fifth Ave., Suite 2600
Portland, OR 97204
O 503.227.3251 - F 503.227.7980


2025D018 DESIGN NUMBER

102970 PROJECT NUMBER

STRUCTURAL REGISTERED PROFESSIONAL ENGINEER 19608 DIGITALLY SIGNED OREGON NOV. 14, 2006 CRAIG J. TOTTEN EXPIRES 06-30-26

PORTLAND INTERNATIONAL AIRPORT

TERMINAL UPPER ROADWAY JOINT REPLACEMENT

EXPANSION JOINT DETAILS - 9

| | | | |
|---|---|---|---|
| SUBMITTED BY | JAY OSTLUND | | |
| DESIGN BY | S. THOMAS | | |
| DRAWN BY | J. DE BOER | | |
| CHECKED BY | C. TOTTEN | | |
| DATE | OCTOBER 2026 | | |
| SHEET NO. | 50 | TYPE: | CD |
| DRAWING NO. | PDX 2026-514 | DISC. SHT. NO. | S6.108 |

DRAWING SCALE IS REDUCED 50% WHEN SHEET SIZE IS 11" x 17". GRAPHIC SCALE FOR REFERENCE ONLY 0 1/4" 1/2" 1" 2"